FLIP-UP FLOOD BARRIER

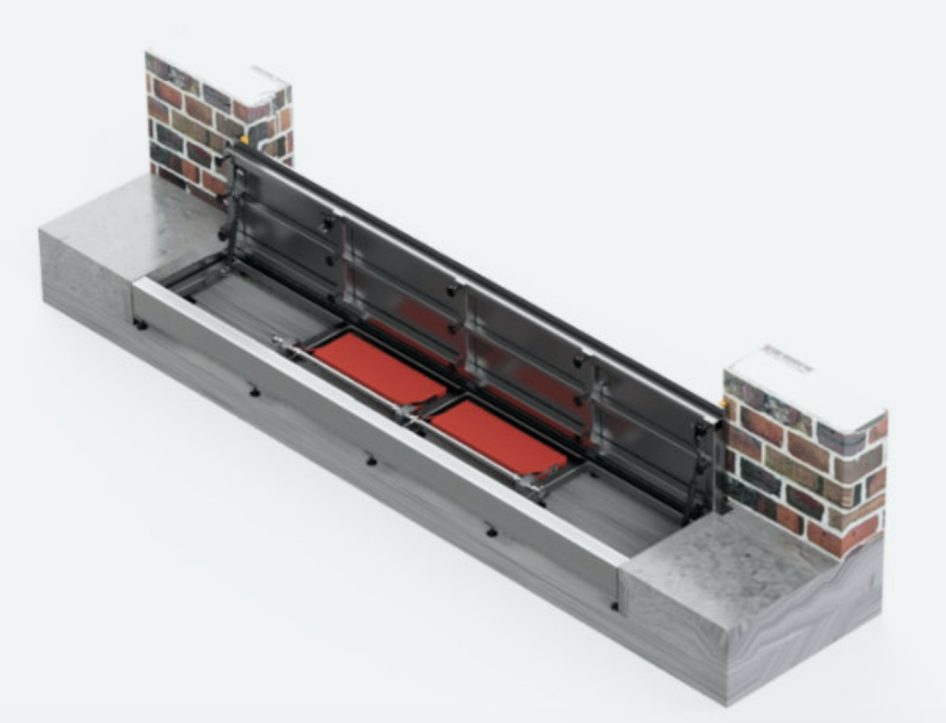

The self-closing barrier is designed to provide simple, reliable and cost-effective flood protection with minimum impact on the aesthetics of a building.

- Light version 1,5 tons
- Heavy duty version 7,5 tot 40 tons

Ideal for:

→ **Garage driveways**
→ **Underground car parks**

AGGĒRES NV | Boomgaarddreef 9 - 2900 Schoten - België | www.aggeres.com | info@aggeres.com | +32 3 633 15 50

FLIP-UP FLOOD BARRIER

BENEFITS

- The system does not use electricity, air or tools to close
- Fail-safe: closure by means of water pressure
- Highly durable
- Can easily handle daily traffic
- Insensitive to temperature fluctuations, UV radiation and ozone

CHARACTERISTICS

- Stainless steel casing, galvanised steel body
- Rapid deployment
- Easy to close with supplied manual winch
- Vandalism proof
- Reliable and durable seals
- Up to 6.5 tons
- Made-to-measure, short delivery times
- Anti-slip surface

AGGĒRES NV | Boomgaarddreef 9 - 2900 Schoten - België | www.aggeres.com | info@aggeres.com | +32 3 633 15 50

FLIP-UP FLOOD BARRIER

AGGĒRES NV | Boomgaarddreef 9 - 2900 Schoten - België | www.aggeres.com | info@aggeres.com | +32 3 633 15 50

FLIP-UP FLOOD BARRIER

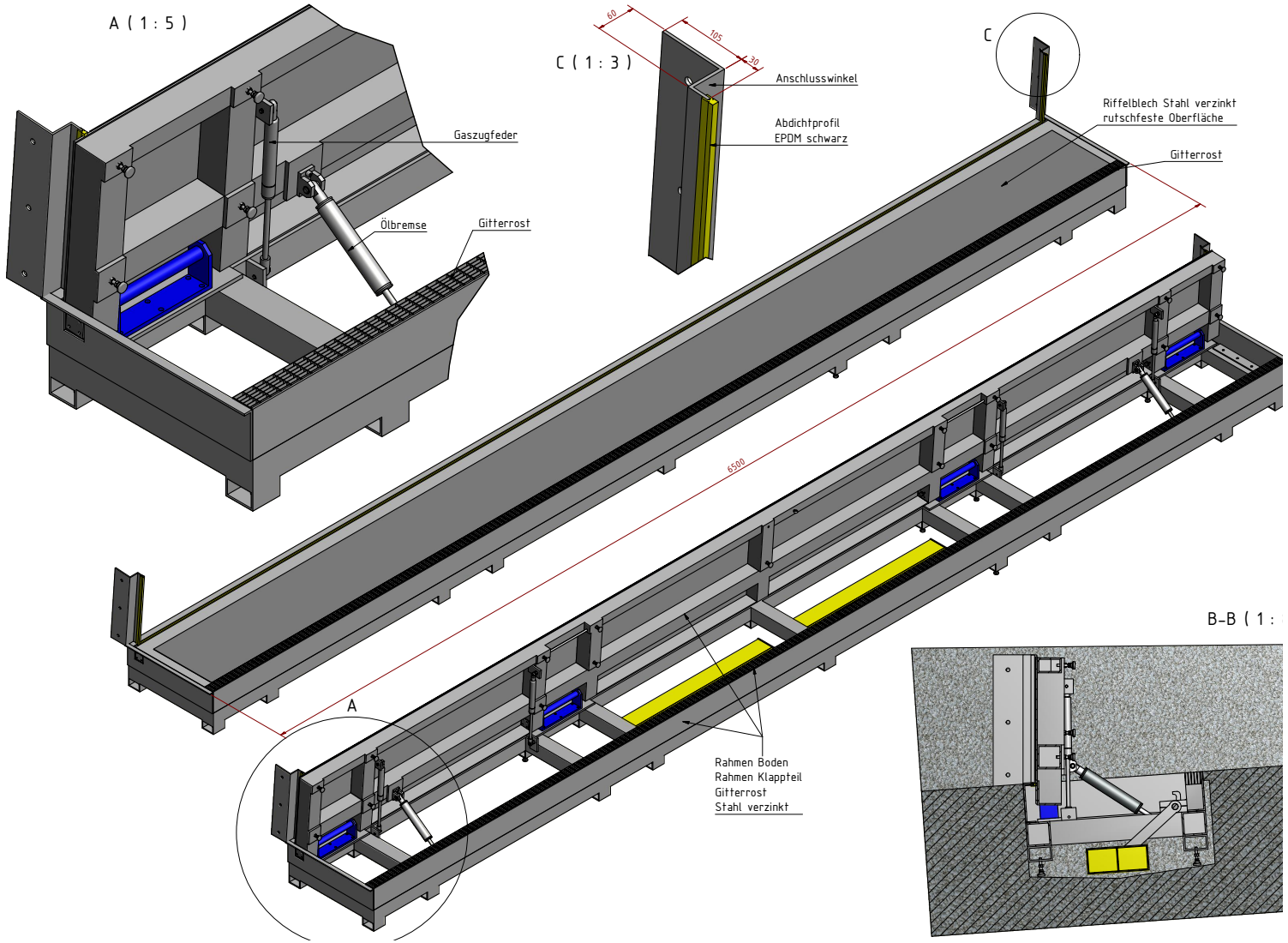

AGGĒRES NV | Boomgaarddreef 9 - 2900 Schoten - België | www.aggeres.com | info@aggeres.com | +32 3 633 15 50